MAGNUSSON

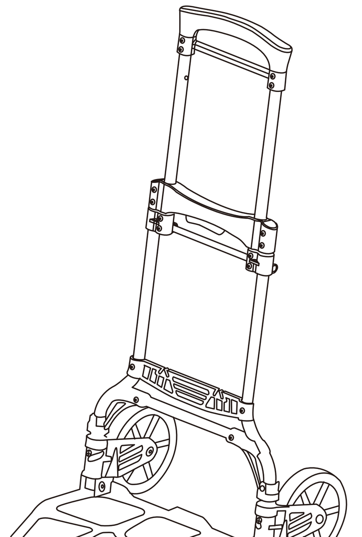

5059340459233

V20920 BX220IM

Safety Instructions • Consignes de sécurité • Instrukcje bezpieczeństwa • Descrierea produsului • Instrucciones Seguridad • Instruções Segurança

EN 4
FR 5
PL 6
RO 7
ES 8
PT 9

Guarantee • Garantie • Gwarancja • Garanție • Garantía • Garantia

EN 10
FR 10
PL 11
RO 12
ES 12
PT 13

Product description • Description du produit • Opis produktu • Descrierea produsului • Descripción del Producto • Descrição do produto

.... 14

Care & maintenance • Entretien et maintenance • Pielęgnacja i konserwacja • Îngrijire și întreținere • Cuidar y mantener • Cuidado e manutenção

EN 15
FR 15
PL 15
RO 15
ES 15
PT 15

EN IMPORTANT - Save these instructions. This manual contains important safety and operating instructions. Read all instructions and follow them with each use of this product.

FR IMPORTANT - Conserver ces instructions. Ce manuel contient d'importantes instructions liées à la sécurité et au fonctionnement. Lire toutes les instructions et les suivre à chaque utilisation de ce produit.

PL WAŻNE - należy zachować tą instrukcję. Niniejszainstrukcjaobsługizawieraważneinformacjedotyczącebezpieczeństwa i użytkowania. Należyprzeczytaćwszystkiewytyczne i zawszestosowaćsię do nichpodczasużytkowaniaproduktu.

RO IMPORTANT – păstrați aceste instrucțiuni. Acest manual conține instrucțiuni importante de siguranță și utilizare. Citiți toate instrucțiunile și urmați-le la fiecare utilizare a acestui produs.

ES IMPORTANTE - Guarde estas instrucciones. Este manual contiene instrucciones de seguridad y funcionamiento importantes. Lea todas las instrucciones y cúmplalas en cada uso de este producto.

PT IMPORTANTE - Guarde estas instruções. Este manual contém instruções importantes de segurança e de funcionamento. Leia todas as instruções e siga-as sempre que utilizar este produto.

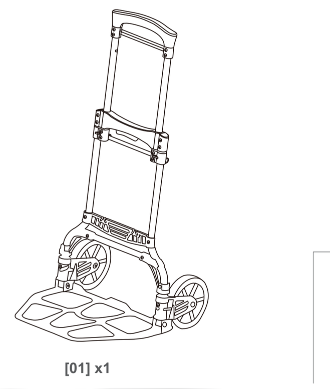

[01] x1

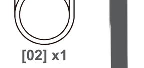

[02] x1

Safety Instructions

- This product is not a toy! Do not let children climb on or play with it.
- Load the product evenly and avoid overload (Max. load:120 kg).
- Obtain additional support for large and wide loads to prevent tipping.
- Do not leave the product unattended, especially when loaded, unless the wheels are chocked or the truck is otherwise secured.
- Do not use on an uneven ground and do not run over curbs or steps - use a ramp.
- Failure to follow these instructions may result in personal injury, damage to the product and property damage.
- Do not stand or lean on the product to avoid product damage and personal injury.
- Do not allow people to ride on the truck.
- Do not use the truck if any part is damaged, paying particular attention to the wheels.
- Store the product in a dry and clean area and out of reach of children and pets.

NOTE:
These important safeguards and instructions cannot cover all possible conditions and situations that may occur. It must be understood that common sense and caution need to be applied by the person using the product.

WARNING!
Read and follow all Safety Rules and Assembly Instructions before assembling this product. Retain this document for further reference.

Guarantee

We take special care to select high quality materials and use manufacturing techniques that allow us to create products incorporating design and durability. This MAGNUSSON FOLDING HAND TROLLEY has a manufacturer's guarantee of 5 years against manufacturing defects, from the date of purchase (if bought in store) or date of delivery (if bought online), at no additional cost for normal (non-professional or commercial) household use.

To make a claim under this guarantee, you must present your proof of purchase (such as a sales receipt, purchase invoice or other evidence admissible under applicable law), please keep your proof of purchase in a safe place. For this guarantee to apply, the product you purchased must be new, it will not apply to second hand or display products. Unless stated otherwise by applicable law, any replacement product issued under this guarantee will only be guaranteed until expiry of the original guarantee period.

This guarantee covers product failures and malfunctions provided the product was used for the purpose for which it is intended and subject to installation, cleaning, care and maintenance in accordance with the information contained in these terms and conditions, in the user manual and standard practice, provided that standard practice does not conflict with the user manual.

This guarantee does not cover defects and damage caused by normal wear and tear or damage that could be the result of improper use, faulty installation or assembly, neglect, accident, misuse, or modification of the product. Unless stated otherwise by applicable law, this guarantee will not cover, in any case, ancillary costs (shipping, movement, costs of uninstalling and reinstalling, labour etc), or direct and indirect damage.

If the product is defective, we will, within a reasonable time, repair or replace it.

Rights under this guarantee are enforceable in the country in which you purchased this product. Guarantee related queries should be addressed to the store you purchased this product from.
The guarantee is in addition to and does not affect your statutory rights.

Garantie

Nous veillons tout particulièrement à sélectionner des matériaux de haute qualité et à utiliser des techniques de fabrication qui nous permettent de créer des produits à la fois design et durables. Ce MAGNUSSON DIABLE PLIABLE bénéficie d'une garantie fabricant de 5 ans couvrant les défauts de fabrication à compter de la date d'achat (en cas d'achat en magasin) ou de la date de livraison (en cas d'achat sur Internet), sans coût supplémentaire pour une utilisation domestique normale (non commerciale ni professionnelle).

Product description

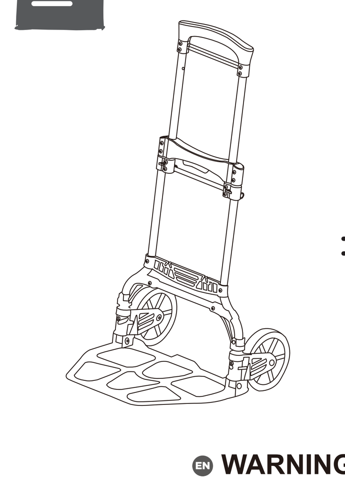

=

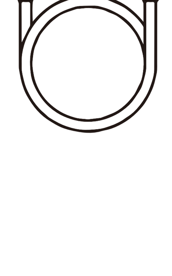

EN WARNING

- Do not stretch beyong maximum usable length of 225cm/88.5".
- Keep eyes, face and unprotected areas of the body out of possible rebound path.
- Keep out of reach of children.
- Do not use to secure heavy or large (wind resistant) loads.
- Do not use worn or frayed bungee's.
- Do not modify or alter the end attachments.
- Secure hooks carefully. Do not attach the hook by its tip.
- Do not join or knot straps together.

BS AU 258 : 1995

ES ADVERTENCIA

- No estirar más allá de la longitud útil máxima de 225cm/88.5".
- Mantenga los ojos, la cara y las zonas del cuerpo no protegidas lejos de un posible trayecto de rebote.
- Mantener fuera del alcance de los niños.
- No utilizar para fijar cargas pesadas o grandes (resistente al viento).
- No utilizar correas desgastadas o rotas.
- No modifique ni cambie los accesorios de los extremos.
- Fije los ganchos con cuidado. No acople el gancho por la punta.
- No unir ni anudar las correas.

BS AU 258 : 1995

FR ATTENTION

- Arrimer fermement sans étirer au-delà de la longueur maximum prévue : 225cm/88.5".
- Garder les yeux, le visage et toutes autres parties du corps non protégées, hors d'atteinte d'un possible retour de sangle.
- Tenir hors de portée des enfants – risque d'étranglement.
- Ne pas utiliser pour sécuriser de lourds ou larges chargements
- Prendre en considération la prise au vent, les secousses et les glissements.
- Ne pas utiliser des sangles abimées
- Ne pas modifier ou transformer les fixations d'extrémité
- Sécuriser les crochets avec précaution. Ne pas fixer le crochet par la pointe.
- Ne pas associer ou nouer les sangles ensemble.

BS AU 258 : 1995

PT AVISO

- Não estique para além do comprimento máximo útil de 225cm/88.5"
- Mantenha os olhos, face e áreas desprotegidas do corpo fora do possível trajeto de recuo.
- Mantenha fora do alcance das crianças.
- Não use para prender cargas pesadas ou grandes (resistentes ao vento).
- Não use correias usadas ou gastas.
- Não modifique ou altere os acessórios das extremidades.
- Prenda os ganchos com cuidado. Não prenda o gancho pela ponta.
- Não unir as fitas nem fazer nós com as mesmas.

BS AU 258 : 1995

PL UWAGA

- Nie rozciągać poza maksymalną użytkową długość 225cm/88.5".
- Oczy, twarz i inne niechronione części ciała trzymać poza możliwą ścieżką odbicia.
- Chronić przed dziećmi.
- Nie używać do zabezpieczania ciężkich lub dużych ładunków (odpornych na wiatr).
- Nie używać zużytych lub postrzępionych pasków.
- Nie modyfikować lub zmieniać końcówek.
- Ostrożnie zabezpieczyć haki. Nie przyłączać haka za jego końcówkę.
- Nie wolno łączyć ani wiązać pasków razem.

BS AU 258 : 1995

RO AVERTIZARE

- Nu extindeți dincolo de lungimea utilă de 225cm/88.5".
- Păstrați-vă ochii, fața și zonele neprotejate ale corpului pe cât posibil în afara zonei posibile de recul.
- A nu se lăsa la îndemâna copiilor.
- Nu utilizați pentru asigurare sarcini grele sau mari (rezistență crescută la vânt).
- Nu utilizați benzi uzate sau fragile.
- Nu modificați sau alterați accesoriile finale.
- Fixați cârligele cu atenție. Nu atașați cârligul numai de vârf.
- Anu se uni și a nu se înnoda curelele între ele.

BS AU 258 : 1995

Care & maintenance

- Avoid using solvents when cleaning plastic parts.
- Most plastic are susceptible to damage from various types of commercial solvents and may be damaged by their use.
- Use damp clean cloths to remove dirt,dust,oil,grease,etc.

Entretien et maintenance

- Évitez d'utiliser des solvants pour nettoyer les pièces en plastique.
- La plupart des matières plastiques sont susceptibles d'être endommagées par différents types de solvants disponibles dans le commerce ; elles risquent donc d'être abîmées en cas d'utilisation de ces derniers.
- Éliminez humide saleté, poussière, huile, graisse, etc., avec un chiffon propre.

Pielęgnacja i konserwacja

- Do czyszczenia plastikowych elementów nie używać rozpuszczalników.

Manufacturer • Fabricant • Producent •Producător • Fabricante:

UK Manufacturer:
Kingfisher International Products Limited,3 Sheldon Square, London W2 6PX,United Kingdom

EU Manufacturer:
Kingfisher International Products B.V.Rapenburgerstraat 175E, 1011 VM Amsterdam,The Netherlands
www.kingfisher.com/products

EN www.diy.com
www.screwfix.com
www.screwfix.ie

To view instruction manuals online, visit www.kingfisher.com/products

FR www.castorama.fr
www.bricodepot.fr
www.screwfix.fr

Pour consulter les manuels d'instructions en ligne, rendez-vous sur le site www.kingfisher.com/products

PL www.castorama.pl

Aby zapoznać się z instrukcją obsługi online, odwiedź stronę www.kingfisher.com/products

RO www.bricodepot.ro

Pentru a consulta manualele de instrucţiuni online, vizitaţi www.kingfisher.com/products

ES www.bricodepot.es

Para consultar los manuales de instrucciones en línea, visite www.kingfisher.com/products

PT www.bricodepot.pt

Para consultar manuais de instruções online, visite www.kingfisher.com/products